Chapters SPS 320 to 325

APPENDIX B

Section	Page	Section	Page
1 GENERAL REQUIREMENTS	233	9 LEDGER–BOARD FASTENERS	243
2 FOOTINGS, AND POST CONNECTIONS	234	10 FREE–STANDING DECKS	245
3 POSTS AND POST–TO–BEAM CONNECTIONS	236	11 LATERAL SUPPORT	246
4 BEAMS	237	12 DECKING	248
5 JOISTS	238	13 GUARD AND POSTS	248
6 JOIST–TO–BEAM CONNECTIONS	240	14 STAIRS	250
7 JOIST HANGERS	240	15 FRAMING PLAN	254
8 LEDGER ATTACHMENTS	241		

SECTION 1: GENERAL REQUIREMENTS

1. All lumber, including for decking, must be pressure–preservative–treated and must be either douglas fir/larch, hemlock/fir, spruce/pine/fir (SPF), or southern pine, of grade #2 or better – unless a naturally durable species such as a western red cedar is used. Lumber in contact with the ground must be rated as "ground–contact." The lumber must be identified by the grade mark of, or certificate of inspection issued by, a professional lumber–grading or inspection bureau or agency (www.alsc.org).

Note: Not all treated lumber is rated for ground contact. See Table C–1 in Appendix C for further information.

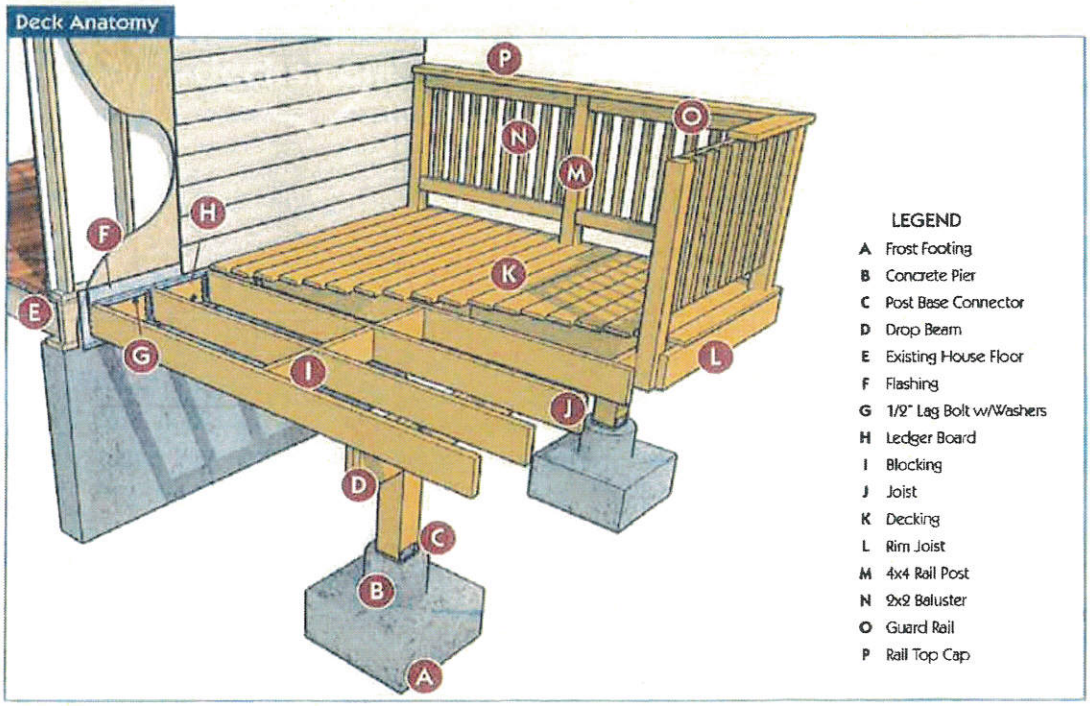

2. Wood–plastic composites must bear a label indicating their performance criteria and compliance with ASTM D7032.

Note: Wood–plastic composites are materials composed of wood fibers or powder that is bound with plastic and used typically as decking and elements of a guard or handrail.

Note: When using a wood–plastic composite, exercise caution as some composite members do not have the same capabilities as their equivalent wood sizes.

3. Nails must be threaded, which includes ring–shanked (annular–grooved) and spiral–grooved.

   Note: A 1/8 inch pilot hole is recommended for all toe–nailing locations.

4. All fasteners must be galvanized steel, stainless steel, or approved for use with preservative–treated lumber.

5. Throughout this document, 1/2 inch–diameter bolts and lag screws are specified for various connections. Edge distance and spacing requirements are based on 1/2 inch–diameter fasteners. If larger (or smaller) fasteners are specified, edge distance and spacing need to be adjusted.

6. Carriage–bolts may be substituted where through–bolts are specified, if carriage–bolt washers are installed at the bolt head.

   Note: Carriage–bolt washers have square holes.

7. Hardware, including joist hangers or post anchors, must be galvanized steel with 1.85 ounces of zinc per square foot (G–185 coating), or stainless steel. All fasteners that are used with any hardware must be the same material as the hardware. All hardware must be installed in accordance with any instructions from the manufacturer.

   Note: For galvanized steel, look for product lines such as "Zmax," "Triple Zinc," or "Gold Coat."

   Note: Galvanized steel is not compatible with stainless steel, which can result in rapid corrosion and structural failure.

   Note: Hardware and fasteners that are beneath a hot tub which uses salt–water disinfection should be stainless steel, grade 304 or 316.

8. Every deck must have an electrical outlet along the perimeter of the deck and within 6.5 feet of the floor in accordance with NEC section 210.52(E)(3). See ch. SPS 316 of the Wisconsin Administrative Code for requirements about installing electrical wiring.

9. A deck constructed in accordance with these standards is not approved for concentrated loads that exceed 40 pounds per square foot (psf), such as from privacy screens, planters, built–in seating, hot tubs, stairs for multiple–level decks, or from snow–drift loads or sliding–snow loads. Engineering analysis is needed for these loads.

   Note: See Appendix C for features of a deck which are somewhat uncommon or which have more complexity than is addressed in this Appendix – such as design values for joists consisting of western cedar or red pine, framing details around chimneys and bay windows, or ledger boards for metal–plate–connected wood floor trusses. Appendix C also includes reference material, such as more–detailed specifications for fasteners.

10. Specifications for fasteners and hardware. All nails must meet the requirements of ASTM F1667. Wood screws must meet the requirements of ANSI/ASME B18.6.1. Bolts and lag screws must meet the requirements of ANSI/ASME B18.2.1.

    Fasteners to be hot–dipped galvanized must meet the requirements of ASTM A153, *Standard Specification for Zinc Coating (Hot–Dip) on Iron and Steel Hardware,* Class D for fasteners 3/8" diameter and smaller or Class C for fasteners with diameters over 3/8".

    Fasteners other than nails and timber rivets may consist of mechanically deposited zinc–coated steel with coating weights in accordance with ASTM B695, Class 55, minimum.

    Hardware to be hot–dipped prior to fabrication must meet ASTM A653, *Standard Specification for Steel Sheet, Zinc–Coated (Galvanized) or Zinc–Iron Alloy–Coated (Galvannealed) by the Hot–Dip Process*, G–185 coating. Hardware to be hot–dipped galvanized after fabrication must meet ASTM A123, *Specification for Zinc (Hot–Dip Galvanized) Coatings on Iron and Steel Products.*

11. Safety glazing at decks shall be in accordance with the safety glazing requirements of the Uniform Dwelling Code (UDC).

SECTION 2: FOOTINGS, AND POST CONNECTIONS

Footings must comply with all of the following:

1. Concrete must be used and must have a minimum compressive strength of 3,000 pounds per square inch.

2. Footing size and thickness must be in accordance with Table 1. (See sections 4 and 5 for determining post spacing and joist length.)
3. Post attachments must be in accordance with Figure 1 except expansion anchors are also permitted – and any instructions from the manufacturer of the anchor must be followed.
4. Post anchors must include a 1–inch–minimum base plate. Steel plates are not required.
5. Each post must bear directly over the middle one–third of a footing.
6. Footings must bear on solid ground below the frost penetration level or at least 48 inches below finished grade, whichever is deeper. Bearing onto unprepared fill material, organic soil, alluvial soil, or mud is prohibited. The bearing capacity of the soil is presumed to be at least 2000 pounds per square foot (psf), and must be verified by a building inspector prior to placement of concrete.
7. If the edge of a deck footing is closer than 5 feet to an existing house wall, the footing must bear at the same elevation as the existing footing for that wall.
8. Construction of footings over utility lines or any service pipe is prohibited.

Note: Call the utility provider before digging.

Table 1
FOOTING SIZE (In Inches)[1,2,3]

Joist Length		Post Spacing (Measured Center to Center)										
		4'	5'	6'	7'	8'	9'	10'	11'	12'	13'	14'
6'	Corner Footing	8	9	10	11	11	12	12	13	14	14	15
	Intermediate Footing	10	11	12	13	14	15	15	16	17	17	18
	Footing Thickness	6	6	6	6	6	6	6	6	6	6	8
7'	Corner Footing	9	10	11	11	12	13	13	14	15	15	16
	Intermediate Footing	11	12	13	14	15	16	17	17	18	19	19
	Footing Thickness	6	6	6	6	6	6	6	6	8	8	8
8'	Corner Footing	10	10	11	12	13	14	14	15	15	16	17
	Intermediate Footing	12	13	14	15	16	17	18	19	19	20	21
	Footing Thickness	6	6	6	6	6	6	8	8	8	8	8
9'	Corner Footing	10	11	12	13	14	14	15	16	16	17	18
	Intermediate Footing	12	14	15	16	17	18	19	20	20	21	22
	Footing Thickness	6	6	6	6	6	8	8	8	8	8	8
10'	Corner Footing	10	12	12	13	14	15	16	16	17	18	18
	Intermediate Footing	13	14	15	17	18	19	20	21	21	22	23
	Footing Thickness	6	6	6	6	8	8	8	8	8	8	10
11'	Corner Footing	11	12	13	14	15	16	16	17	18	19	19
	Intermediate Footing	13	15	16	17	19	20	21	22	22	23	24
	Footing Thickness	6	6	6	6	8	8	8	8	8	10	10
12'	Corner Footing	11	12	14	15	15	16	17	18	19	19	20
	Intermediate Footing	14	15	17	18	19	20	21	22	23	24	25
	Footing Thickness	6	6	6	8	8	8	8	8	10	10	10
13'	Corner Footing	12	13	14	15	16	17	18	19	19	20	21
	Intermediate Footing	14	16	17	19	20	21	22	23	24	25	26
	Footing Thickness	6	6	6	8	8	8	8	10	10	10	10
14'	Corner Footing	12	13	15	16	17	18	18	19	20	21	22
	Intermediate Footing	15	17	18	19	21	22	23	24	25	26	27
	Footing Thickness	6	6	8	8	8	8	10	10	10	10	10
15'	Corner Footing	12	14	15	16	17	18	19	20	21	22	22
	Intermediate Footing	15	17	19	20	21	23	24	25	26	27	28
	Footing Thickness	6	6	8	8	8	10	10	10	10	10	12
16'	Corner Footing	13	14	15	17	18	19	20	20	21	22	23
	Intermediate Footing	16	18	19	21	22	23	25	26	27	28	29
	Footing Thickness	6	8	8	8	8	10	10	10	10	12	12

[1]All footing sizes are base diameters[2].

[2]For square footings, insert the diameter (d) into the following formula: $\sqrt{((d/2)^2 \times \pi)}$. This number will give you the square dimension and must be rounded up to the nearest inch.

[3]Joist length is the joist span plus any overhang beyond a beam. See section 5.4.

Figure 1

FOOTINGS

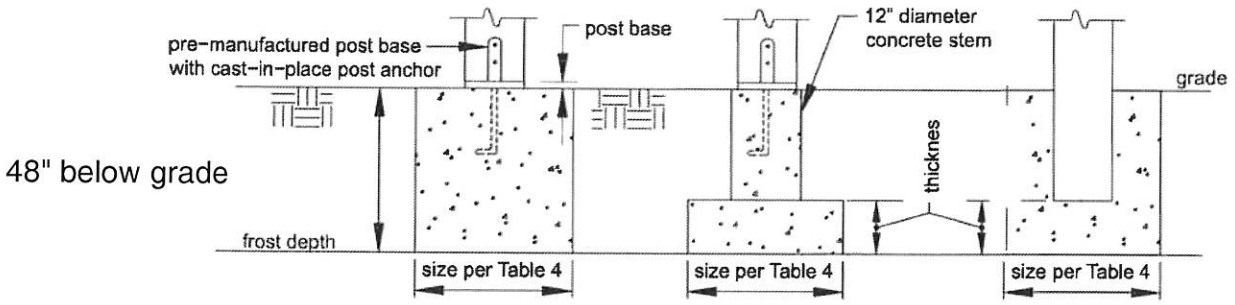

SECTION 3: POSTS AND POST–TO–BEAM CONNECTIONS

Posts must comply with all of the following:

1. The post height, measured from the top of the footing to the underside of the beam, must be in accordance with Table 2.

Table 2
MAXIMUM POST HEIGHT

Post Size	Maximum Height
4"x4"	6'
4"x6"	8'
6"x6"	14'

2. Any post supporting a beam splice must be a minimum of 6"x6".
3. Beams must be attached to posts by the appropriate methods shown in Figure 2. Toe–nailing of beams to posts is prohibited.
4. Post caps, as shown in Figure 2, must be specifically designed for 2– or 3–ply beams and the post size used. Attachment must be in accordance with the manufacturer's instructions.
5. It is recommended that cut–ends of posts should be field–treated with a wood preservative. These preservatives can be found in the paint department of most hardware or home–center stores.

Figure 2

POST–TO–BEAM CONNECTIONS

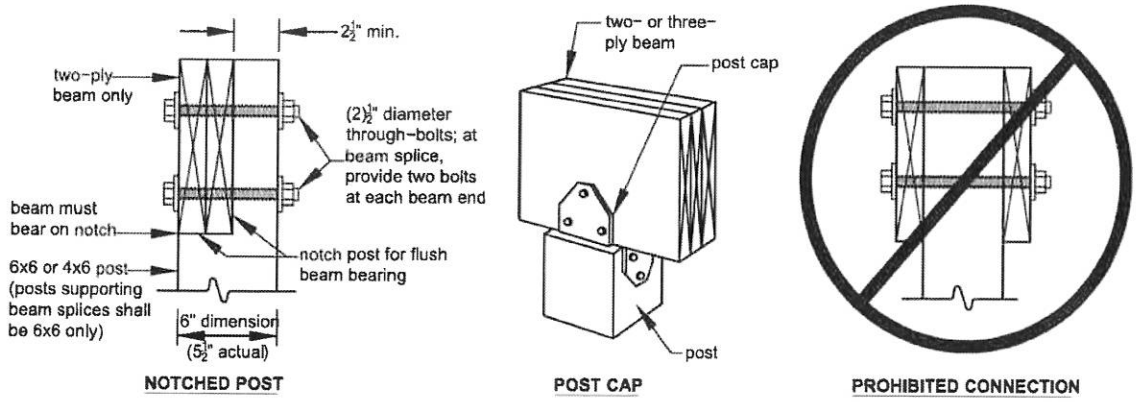

SECTION 4: BEAMS

Beams must comply with all of the following:

1. As shown in Figure 3, the beam–span length is measured between the centerlines of 2 adjacent posts and does not include the overhangs.
2. Beam size is determined using Table 3A or 3B. The depth of flush beams must be greater than or equal to the joist depth.
3. Beams may overhang past the center of the post up to one–fourth of the actual beam span, as shown in Figure 3.
4. Where multiple 2x members are used to assemble a beam, the plies of the beam must be fastened in accordance with Figure 4.
5. Pressure–preservative–treated glulam beams are permissible for spans longer than those shown in Table 3. However, a design and plan submission is required during the permit application process.

Figure 3
BEAM TYPES

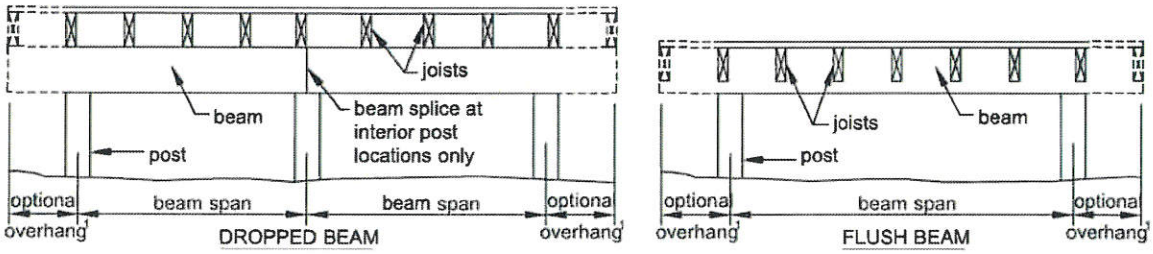

[1]The maximum length of the overhang is equal to one–fourth of the actual beam span length (0.25 x beam span).

Table 3A
MAXIMUM BEAM–SPAN LENGTH[1] FOR DOUGLAS FIR/LARCH[3], HEM/FIR[3], SPRUCE/PINE/FIR (SPF)[3], WESTERN CEDAR, PONDEROSA PINE[4], AND RED PINE[4]

Joist Span	(Number of Plies) Beam Size[2] – Inches											
	3x6 (2)2x6	3x8 (2)2x8	3x10 (2)2x10	3x12 (2)2x12	4x6	4x8	4x10	4x12	(3)2x6	(3)2x8	(3)2x10	(3)2x12
≤ 6'	5'–5"	6'–10"	8'–4"	9'–8"	6'–5"	8'–5"	9'–11"	11'–5"	7'–4"	9'–8"	12'–0"	13'–11"
≤ 8'	4'–8"	5'–11"	7'–3"	8'–5"	5'–6"	7'–3"	8'–7"	9'–11"	6'–8"	8'–6"	10'–5"	12'–1"
≤ 10'	4'–2"	5'–4"	6'–6"	7'–6"	4'–11"	6'–6"	7'–8"	8'–10"	6'–0"	7'–7"	9'–4"	10'–9"
≤ 12'	3'–10"	4'–10"	5'–11"	6'–10"	4'–6"	5'–11"	7'–0"	8'–1"	5'–6"	6'–11"	8'–6"	9'–10"
≤ 14'	3'–6"	4'–6"	5'–6"	6'–4"	4'–2"	5'–6"	6'–6"	7'–6"	5'–1"	6'–5"	7'–10"	9'–1"
≤ 16'	3'–1"	4'–1"	5'–1"	5'–11"	3'–11"	5'–2"	6'–1"	7'–0"	4'–9"	6'–0"	7'–4"	8'–6"
≤ 18'	2'–9"	3'–8"	4'–8"	5'–7"	3'–8"	4'–10"	5'–8"	6'–7"	4'–6"	5'–8"	6'–11"	8'–1"

[1]Spans are based on 40 psf live load, 10 psf dead load, normal loading duration, wet service conditions, and deflections of $\Delta = L/360$ for main span and L/180 for overhang with a 220 lb. point load.

[2]Beam depth must be equal to or greater than joist depth if joist hangers are used (see Figure 8, Option 3).

[3]Incising is assumed.

[4]Design values based on northern species with no incising assumed.

Table 3B
MAXIMUM BEAM–SPAN LENGTH FOR SOUTHERN PINE[1]

Joist Span	(Number of Plies) Beam Size[2] – Inches							
	(2) 2x6	(2) 2x8	(2) 2x10	(2) 2x12	(3) 2x6	(3) 2x8	(3) 2x10	(3) 2x12
≤ 6'	6'–11"	8'–9"	10'–4"	12'–2"	8'–2"	10'–10"	13'–0"	15'–3"
≤ 8'	5'–11"	7'–7"	9'–0"	10'–7"	7'–5"	9'–6"	11'–3"	13'–3"
≤ 10'	5'–4"	6'–9"	8'–0"	9'–5"	6'–8"	8'–6"	10'–0"	11'–10"
≤ 12'	4'–10"	6'–2"	7'–4"	8'–7"	6'–1"	7'–9"	9'–2"	10'–9"
≤ 14'	4'–6"	5'–9"	6'–9"	8'–0"	5'–8"	7'–2"	8'–6"	10'–0"
≤ 16'	4'–3"	5'–4"	6'–4"	7'–6"	5'–3"	6'–8"	7'–11"	9'–4"
≤ 18'	4'–0"	5'–0"	6'–0"	7'–0"	5'–0"	6'–4"	7'–6"	8'–10"

[1]Spans are based on 40 psf live load, 10 psf dead load, normal loading duration, wet service conditions, and deflections of $\Delta = L/360$ for main span and L/180 for overhang with a 220 lb. point load.

[2]Beam depth must be equal to or greater than joist depth if joist hangers are used (see Figure 8, Option 3).

Figure 4
BEAM ASSEMBLY

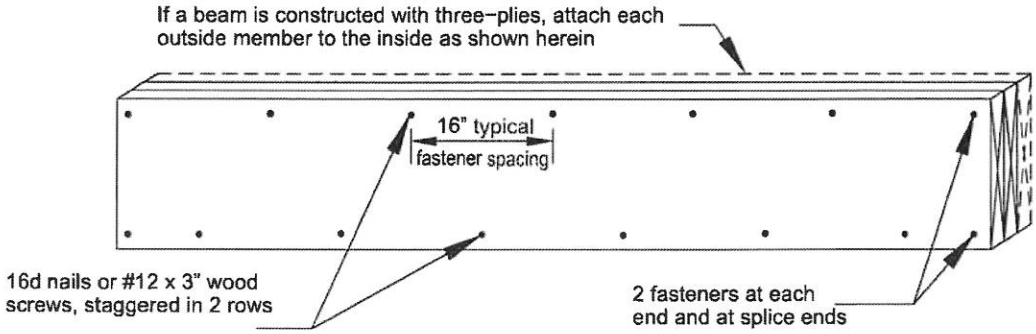

SECTION 5: JOISTS

Joists must comply with all of the following:

1. The joist–span length is measured between the centerline of bearing at each joist–span end and does not include the overhangs. Use Table 4 to determine the joist size based on span length and joist spacing. See section 12.4 for limits on joist spacing if the decking consists of a wood–plastic composite.
2. See Figures 5 through 7 for joist–span types.
3. Joists must bear at least 3 inches nominal onto beams, unless joist hangers are used in accordance with section 7.
4. Joists may overhang past the center of the beam up to one–fourth of the actual joist span.
5. Provide full–depth 2x blocking or bridging for 2"x10" or deeper joists at intervals not exceeding 8 feet – except the blocking can be reduced to 60% of the height if placed above a beam, for drainage purposes. Attach the blocking or bridging with (3)10d toe–nails at each end.
6. Attach a continuous rim joist as shown in Figures 5 and 7 unless blocking or bridging is provided for each joist at the beam where a joist overhang begins. Attach the rim joist to the end of each joist with (3)10d nails or (3)#10 by 3–inch wood screws.

Figure 5
JOISTS WITH DROPPED BEAM – DECK ATTACHED AT HOUSE

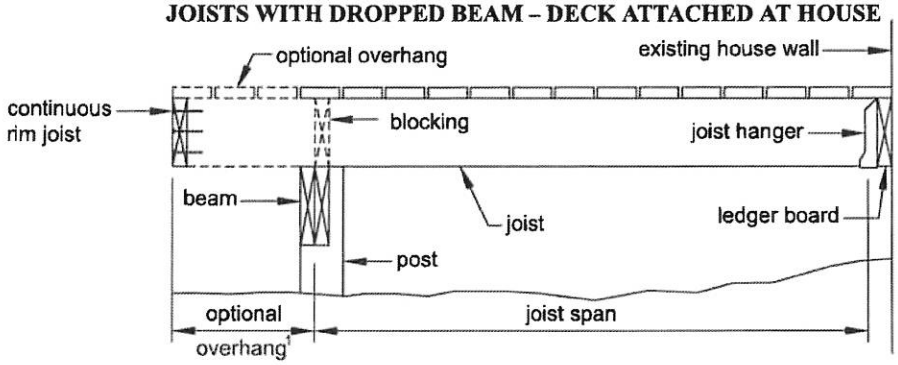

[1]The maximum length of the overhang is equal to one–fourth of the actual joist span length (0.25 x joist span).

Figure 6
JOISTS WITH FLUSH BEAM – DECK ATTACHED AT HOUSE

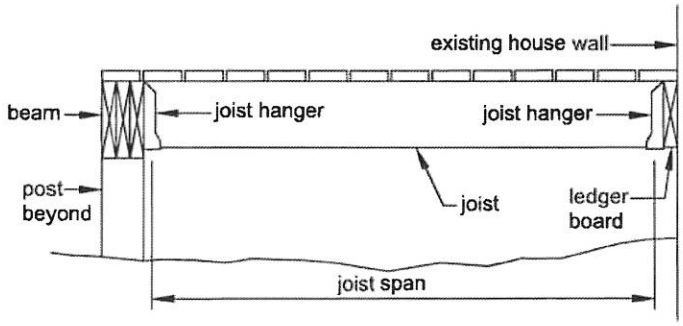

Figure 7
JOISTS WITH TWO DROPPED BEAMS/FREE–STANDING DECK
(See section 10 for more information.)

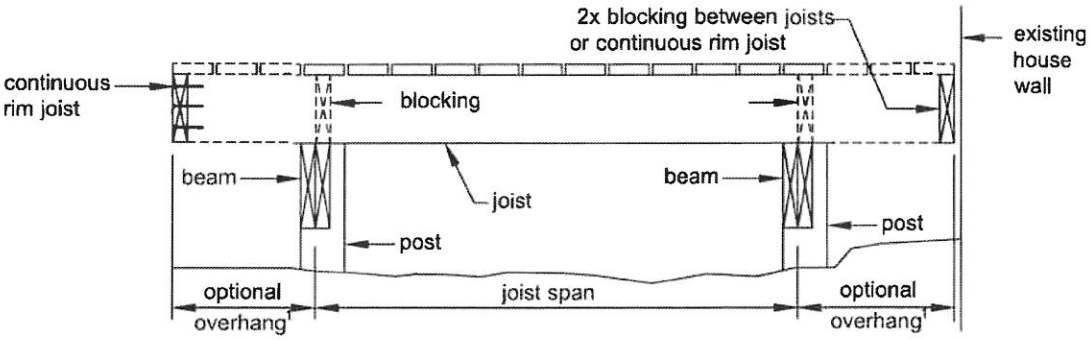

[1]The maximum length of the overhang is equal to one–fourth of the actual joist span length (0.25 x joist span).

Table 4
MAXIMUM JOIST–SPAN LENGTH[1]

Joist Spacing (on center)	Joist Size	Douglas Fir/Larch, Hem/Fir, SPF[2]		Southern Pine	
		Without Overhang	With Over-hangs	Without Overhang	With Over-hangs
12"	2"x6"	9'–1"	8'–1"	9'–6"	8'–7"
	2"x8"	12'–6"	9'–5"	13'–1"	10'–1"
	2"x10"	15'–8"	13'–7"	16'–2"	14'–6"
	2"x12"	18'–0"	18'–0"	18'–0"	18'–0"
16"	2"x6"	8'–3"	8'–0"	8'–7"	8'–7"
	2"x8"	11'–1"	9'–5"	11'–10"	10'–1"
	2"x10"	13'–7"	13'–7"	14'–0"	14'–0"
	2"x12"	15'–9"	15'–9"	16'–6"	16'–6"
24"	2"x6"	6'–9"	6'–9"	7'–6"	7'–6"
	2"x8"	9'–1"	9'–1"	9'–8"	9'–8"
	2"x10"	11'–1"	11'–1"	11'–5"	11'–5"
	2"x12"	12'–10"	12'–10"	13'–6"	13'–6"

[1]Spans are based on 40 psf live load, 10 psf dead load, normal loading duration, wet service conditions, and deflections of $\Delta = L/360$ for main span and L/180 for overhang with a 220 lb. point load.

[2]Incising is assumed.

SECTION 6: JOIST – TO – BEAM CONNECTIONS

Joists must be attached to beams in accordance with Figure 8 and all of the following:

1. Use Options 1 or 2 if joists bear on a dropped beam.
2. Use Option 3 if joists bear at a flush beam; see section 7 for hanger requirements.
3. Mechanical fasteners or hurricane clips must have a minimum capacity of 100 pounds in both uplift and lateral directions. Installation must be in accordance with the manufacturer's instructions.

Figure 8
JOIST–TO–BEAM CONNECTIONS

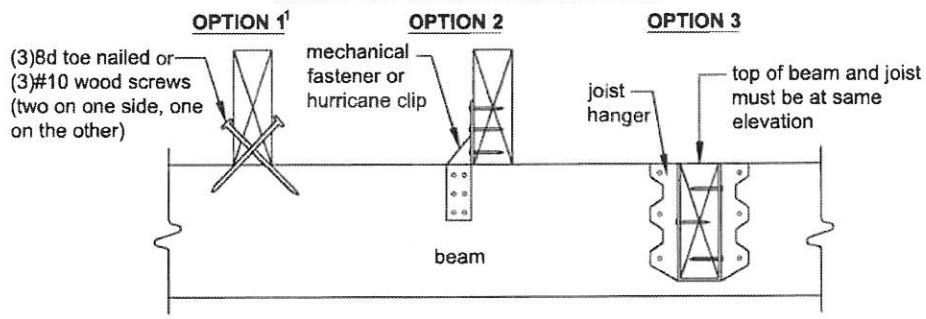

[1]Option 1 is not allowed on free–standing decks.

SECTION 7: JOIST HANGERS

Joist hangers must comply with all of the following:

1. The joist–hanger depth (d, as shown in Figure 9) must be at least 60 percent of the joist depth.
2. The manufactured width of the joist hanger must accommodate the number of plies being carried.
3. Do not bend hanger flanges to accommodate field conditions.

4. For joist hangers that are fastened to a ledger board, screws which are recommended by the manufacturer must be used. All other fasteners are permitted to be nails. The number of fasteners and the manner in which they are used must be as specified by the manufacturer.
5. Use joist hangers with inside flanges if clearances to the edge of the beam or ledger board dictate.
6. Clip–angles or brackets used to support framing members in lieu of joist hangers are prohibited.
7. Joists must not frame in from both sides of the same beam. Engineering analysis is needed if more beams are needed than are shown in Figures 5 to 7.
8. Each joist hanger must have the minimum capacity listed in Table 5.

Figure 9
JOIST HANGERS

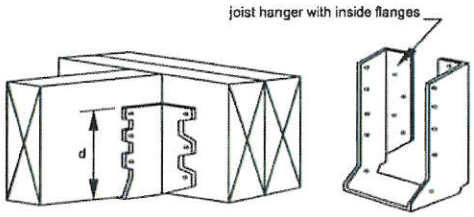

Table 5
JOIST HANGER DOWNLOAD

Joist Size	Minimum Capacity, lbs
2"x6"	500
2"x8"	500
2"x10"	600
2"x12"	700

SECTION 8: LEDGER ATTACHMENTS

General requirements. Ledger boards must be attached to the existing house in accordance with all of the following and section 9. Compliance is critical to ensure the safety and structural stability of your deck.

1. The ledger–board depth must be greater than or equal to the depth of the deck joists, but not less than a 2"x8".
2. The ledger board must be attached in accordance with one of the conditions shown in Figures 11 through 13 – except if metal–plate–connected wood floor trusses were used in the house, see the text below for manufactured wood trusses.
3. The existing band board on the house must be capable of supporting the deck. If this cannot be verified or if existing conditions differ from the details here, then a free–standing deck or an engineered design is required.
4. The top of the ledger board and the top of the deck joists must be at the same elevation.

Wood I–joists. Many homes are constructed with wood I–joists, as shown in Figure 10. Rather than utilize a 2x band board, these systems are often constructed with a minimum 1–inch–thick engineered wood product (EWP) band board capable of supporting a deck. If a minimum 1–inch EWP or 2x band board is not present, then a free–standing deck is required, as addressed in section 10.

Figure 10: WOOD I–JOISTS

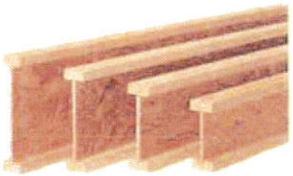

Manufactured wood trusses. A metal–plate–connected wood truss (MPCWT) is an engineered, prefabricated structural component that is designed for each specific application. MPCWT systems that are used in residential floors are often installed with a 2"x4" lumber "ribbon" board at the ends of the trusses to tie the ends of the trusses together (see Detail 1 in Appendix C.). The ribbon board, by itself, is not intended to support the deck ledger and deck. Installing a residential deck where the floor for the house uses a MPCWT system must be in accordance with a standard detail provided by the truss designer, a corresponding detail in section 7 of Appendix C, or a full plan submission – unless the deck is free–standing as addressed in section 10.

Siding and flashing. Flashing must be installed in accordance with all of the following:

1. The exterior finish, such as house siding, must be removed in the area for the ledger board prior to the installation of the ledger board.
2. Continuous flashing with a drip edge, as shown in Figure 11, is required at a ledger board that is attached to wood–framed construction. Caulking is needed with the flashing at a threshold to prevent water intrusion due to splash from the deck or due to melting snow and ice.

3. Flashing must be a corrosion–resistant metal having a minimum nominal 0.019–inch thickness – such as galvanized steel coated with 1.85 ounces of zinc per square foot (G–185 coating), copper (attached using copper nails only), or stainless steel – or must be a UV–resistant plastic recommended by its manufacturer for this use. Do not use aluminum in direct contact with lumber treated with preservatives that contain copper, such as ACQ, copper azole, or ACZA.

Figure 11
ATTACHMENT OF LEDGER BOARD TO BAND BOARD OR BAND JOIST

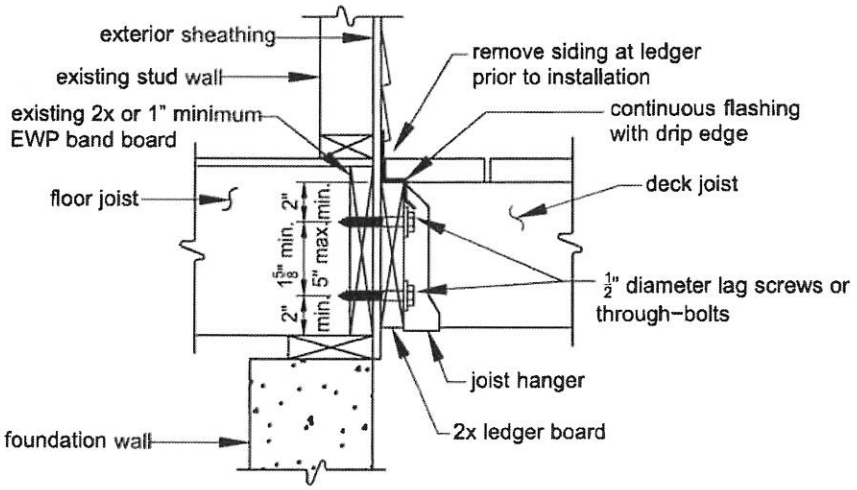

Figure 12
ATTACHMENT OF LEDGER BOARD TO SOLID FOUNDATION

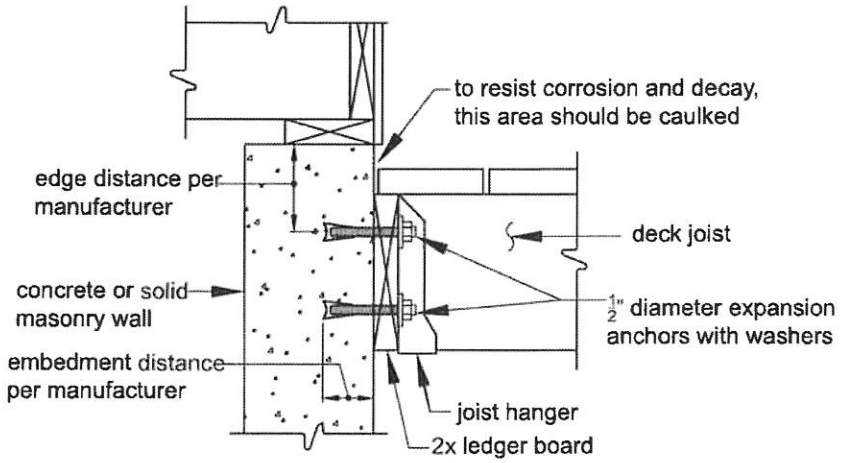

Figure 13
ATTACHMENT OF LEDGER BOARD TO HOLLOW FOUNDATION

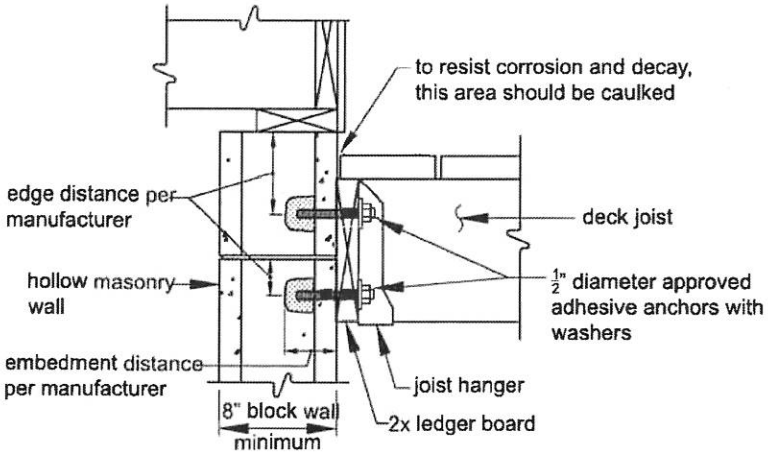

Prohibited ledger attachments. Attaching a ledger board to or through an exterior veneer such as brick or stone, or to or through a masonry chimney, or to a house overhang – as shown below – are prohibited. In such cases, the deck must be free–standing, as addressed in section 10. Attaching a ledger board to a house overhang is allowed if supported by engineering.

Figure 14
PROHIBITED LEDGER ATTACHMENTS

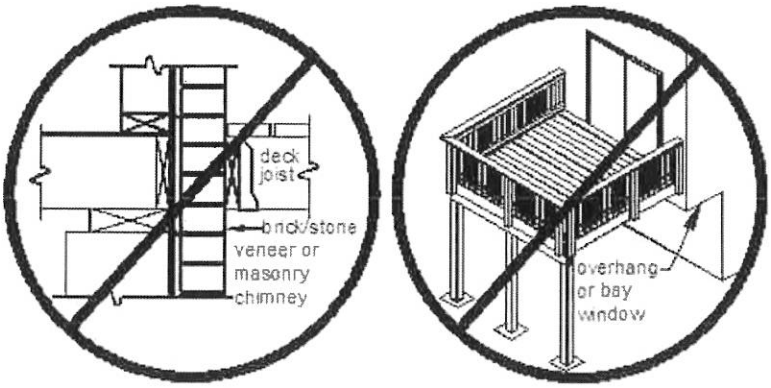

SECTION 9: LEDGER–BOARD FASTENERS

General requirements. Ledger board fasteners must be installed in accordance with this section. Placement and spacing must be in accordance with Figure 15 and Table 6. Only the fastener types listed here are approved for use; lead anchors are prohibited. Adequacy of connections may be verified by local inspectors.

Figure 15
LEDGER BOARD FASTENER SPACING AND CLEARANCES

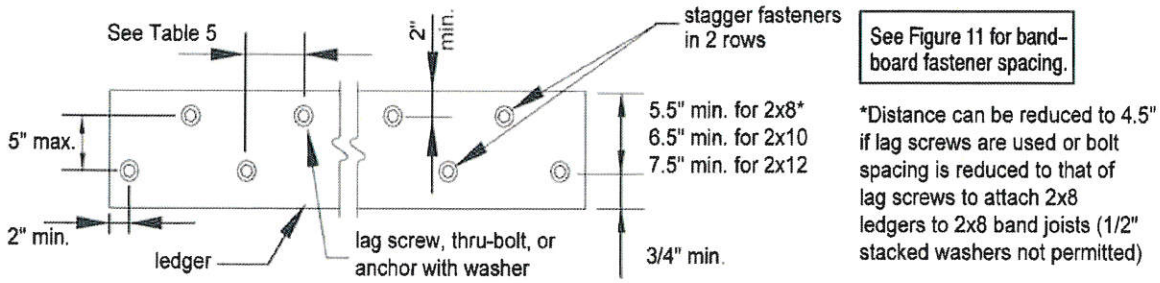

Table 6
LEDGER BOARD FASTENER SPACING, ON CENTER[1,2,3]

Fastener	Band Board	Joist Span: less than or equal to						
		6'	8'	10'	12'	14'	16'	18'
Lag screws	1" EWP	24"	18"	14"	12"	10"	9"	8"
	1 1/8" EWP	28"	21"	16"	14"	12"	10"	9"
	2x Lumber	30"	23"	18"	15"	13"	11"	10"
Through–Bolts	1" EWP	24"	18"	14"	12"	10"	9"	8"
	1 1/8" EWP	28"	21"	16"	14"	12"	10"	9"
	2x Lumber	36"	36"	34"	29"	24"	21"	19"
Through–Bolts with 1/2" stacked washers[4,5]	2x Lumber	36"	36"	29"	24"	21"	18"	16"
Adhesive anchors	——	32"	32"	32"	24"	24"	16"	16"

[1]These values are valid for deck ledgers consisting of douglas fir/larch, hem/fir, or southern pine; and for band boards consisting of douglas fir–larch, hem–fir, spruce–pine–fir, southern pine, or engineered wood product (EWP).

[2]Where solid–sawn pressure–preservative–treated deck ledgers are attached to engineered wood products (minimum 1" thick wood structural panel band joist or structural composite lumber including laminated veneer lumber), the ledger attachment must be designed in accordance with accepted engineering practice. These tabulated values are in accordance with that practice and are based on 300 lbs and 350 lbs for 1" and 1 1/8" EWP rim board, respectively.

[3] The thickness of the sheathing over the band board must not exceed 15/32".

[4] The maximum gap between the face of the ledger board and face of the wall sheathing is 1/2".

[5] Wood structural panel sheathing, gypsum board sheathing, or foam sheathing is permitted between the ledger board and the band board. Stacked washers are permitted in combination with wood structural panel sheathing, but are not permitted in combination with gypsum board or foam sheathing. The maximum distance between the face of the ledger board and the face of the band board is 1".

Through–bolts. Through–bolts must have a diameter of 1/2 inch. Pilot holes for through–bolts must be 17/32 to 9/16 inches in diameter. Through–bolts must be equipped with washers at the bolt head and nut. Bolts should be tightened 6 to 12 months after construction due to drying and wood shrinkage.

Expansion anchors. Expansion or adhesive anchors must be used for attaching a ledger board to a concrete or solid masonry wall, as shown in Figure 12. The bolt or threaded rod of expansion anchors must have a diameter of 1/2 inch, which in some cases may result in needing a 5/8 inch–diameter anchor. Expansion anchors must be installed in accordance with the manufacturer's instructions and must be equipped with washers.

Adhesive anchors. Approved adhesive anchors with a 1/2 inch–diameter threaded rod must be used for attaching a ledger board to hollow masonry, as shown in Figure 13. Examples of approved adhesive anchors include the Epcon Acrylic 7 by ITW Ramset/Red Head, and the HY–20 by Hilti. Adhesive anchors are also permitted with concrete or

solid masonry installations. Adhesive anchors must be installed in accordance with the manufacturer's instructions and must be equipped with washers. Adhesive cartridges should remain on the jobsite for inspector verification.

Lag screws. The diameter, length, and shank of lag screws must comply with Figure 16. Lag screws must be equipped with washers and be installed in the following sequence:

1. Drill a 1/2 inch–diameter hole in the ledger board and a 5/16 inch–diameter pilot hole into the solid–connection material of the existing house.
2. Insert the lag screw through the ledger board and into the pilot hole by turning. Do not drive with a hammer. Use soap or a wood–compatible lubricant if needed to facilitate tightening.
3. Tighten each lag screw snugly, but do not over–tighten so as to cause wood damage.

Figure 16
LAG SCREW

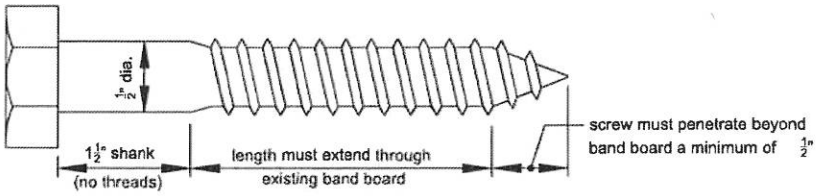

SECTION 10: FREE–STANDING

A deck that is free–standing does not utilize the exterior wall of the existing house to support vertical loads. Instead, an additional beam is provided at or offset from the existing house wall, as shown in Figure 17. If the edge of a deck footing is closer than 5 feet to an existing exterior house wall, the footing must bear at the same elevation as the existing wall footing as shown in Figure 17. For a house with a basement, a cylindrical footing (caisson) is recommended to minimize required excavation at the basement wall.

Figure 17
FREE–STANDING DECK

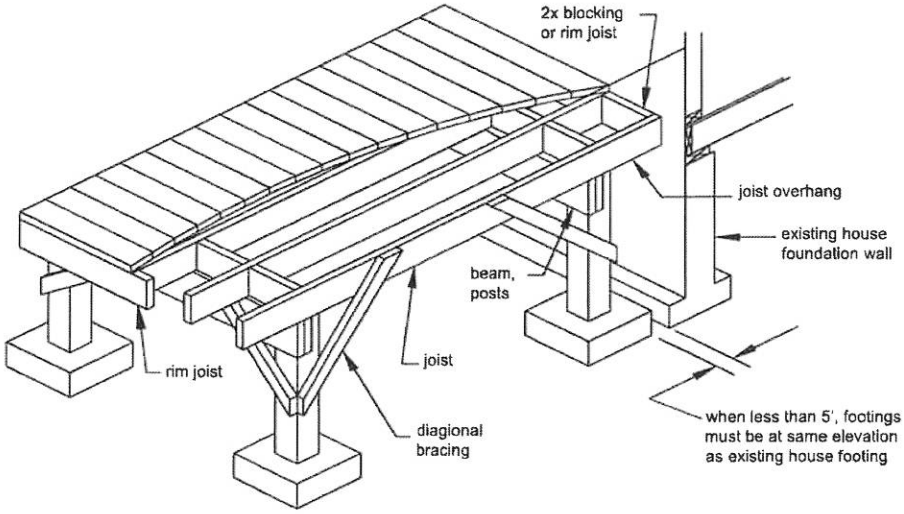

SECTION 11: LATERAL SUPPORT

A deck that is more than 24 inches above grade must resist lateral loads in accordance with the following:

Diagonal Bracing. Provide diagonal bracing both parallel and perpendicular to the beam at each post as shown in Figure 18. Where parallel to the beam, the bracing must be bolted to the post at one end and to the beam at the other. Where perpendicular to the beam, the bracing must be bolted to the post at one end and to a joist or blocking between joists at the other. Where a joist does not align with the bracing location, provide blocking between the adjacent joists.

Exceptions: Bracing is not required perpendicular to the house for a deck that is attached to the house with both a ledger board under sections 8 and 9 and the connection specified in either Figure 19 or 20. For a free–standing deck that is attached to the house as specified in Figure 21, bracing parallel to the house may be omitted at the beam adjacent to the house. All bracing may be omitted for a deck which is attached to the house in accordance with sections 8 and 9 or Figure 21 and which has all of its decking installed at a 45 degree angle to the deck joists.

Figure 18
DIAGONAL BRACING REQUIREMENTS

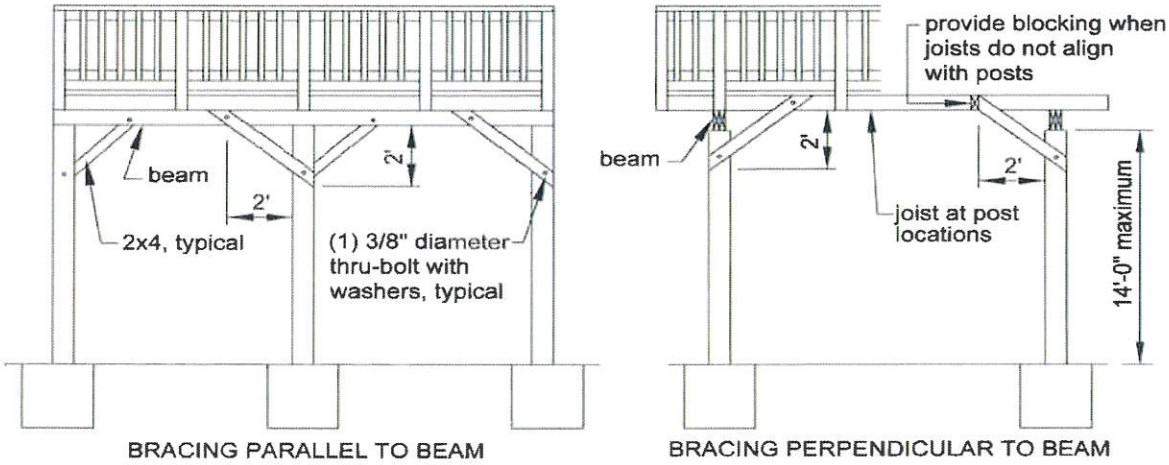

Figure 19
TENSION–TIE CONNECTION, WITH LEDGER BOARD

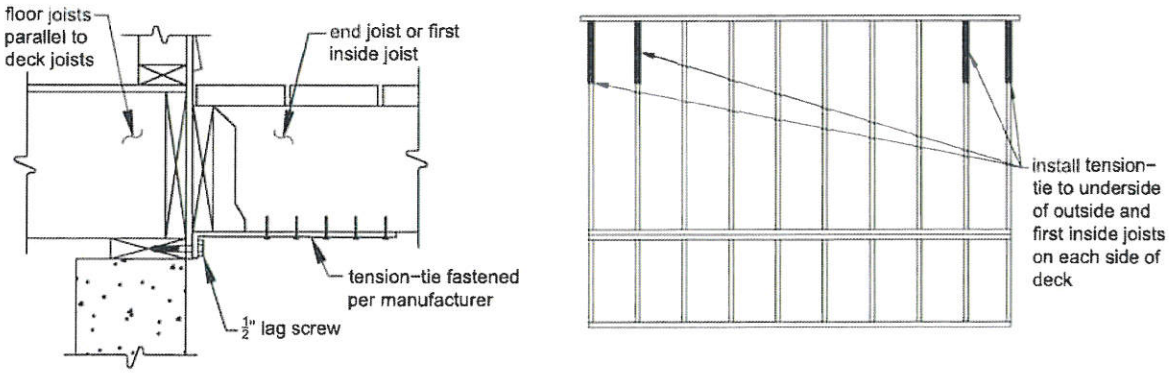

Tension–tie requirements. Tension ties, if used instead of perpendicular bracing as described above, must comply with all of the following, but are not permitted for free–standing decks:

1. The deck joists and floor joists must be parallel.
2. At least 4 ties must be installed, at the end joist and first inside joist at each end of the deck as shown in Figure 19. A set of tension–ties must be installed for each structurally independent section of a multi–level deck.
3. Approved tension–ties include the LTS19–TZ from USP or DTT1Z from Simpson Strong–Tie.
4. The minimum capacity of each tension–tie is 750 pounds.

5. Tension ties which are not available in a G–185 zinc coating require a barrier membrane separating the tension tie and the preservative–treated joist. The barrier membrane must be recommended for this location by its manufacturer.
6. Tension–ties must be attached to the underside of the joists in accordance with the manufacturer's instructions. Tension–ties must be attached to the exterior wall with lag screws as shown in Figure 19. Lag screws must penetrate a minimum of 3 inches into the sill plate or top plate of a wood–framed wall.
7. Where attaching to a concrete wall, lags screws may be replaced with adhesive or expansion anchors and a 1/2 inch threaded rod, with a withdrawal capacity of at least 750 pounds. The anchor must be installed in accordance with the manufacturer's instructions.

Figure 20
HOLD–DOWN TENSION DEVICE, WITH LEDGER BOARD

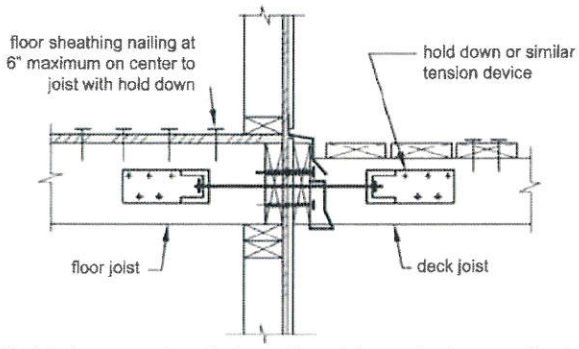

Hold–down tension devices. Hold–down tension devices, if used instead of perpendicular bracing as described above, must be provided in at least 2 locations per deck, and each device must have an allowable–stress–design capacity of at least 1,500 pounds.

Free–standing deck – attachment to house. Attach the deck's rim joist to the existing house exterior wall as shown in Figure 21 for a free–standing deck, if diagonal bracing parallel to the house is omitted, as described above. The wall must be sheathed with minimum 3/8 inch wood structural panel sheathing. Use lag screws or through–bolts if fastening to an existing band joist or wall stud; and use expansion or adhesive anchors if fastening to concrete or masonry. Do not attach to brick veneers. Verify this condition in the field prior to utilizing this method. Fasteners must be 16 inches on center and staggered in 2 rows. Flashing over the rim joist is required and must be installed in accordance with the flashing provisions in section 8.

Figure 21
ATTACHMENT OF FREE–STANDING DECK TO HOUSE FOR LATERAL SUPPORT

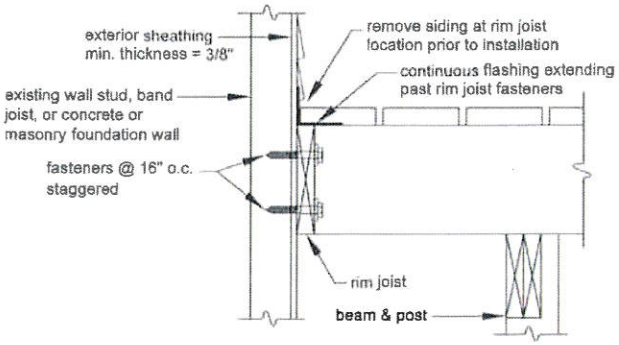

SECTION 12: DECKING

All decking materials must be wood or a wood–plastic composite and must comply with all of the following:

1. Wood decking must be 2x4s, 2x6s, or five–quarter span–rated decking boards. Wood–plastic–composite sizes must be in accordance with the manufacturer's instructions. Plastic decking may be used if it is approved by a professional testing organization for supporting a live load of 40 psf and is installed according to the manufacturer's instructions.
2. Decking must be attached in accordance with Figure 22, and may be placed at an angle of 45 to 90 degrees to the joists unless disallowed in the manufacturer's instructions. If the decking is wet, place it with no gap so that after drying, a ?–inch gap is created.
3. Decking may overhang a joist by up to 3 inches unless disallowed in the manufacturer's instructions.
4. The center–to–center joist spacing may be up to 24 inches for wood decking, but may not exceed 16 inches for wood–plastic–composite decking unless specified otherwise by the manufacturer.
5. Each wood decking member must bear on a minimum of 4 joists or intermediate blocking between joists.
6. Placement and attachment of wood–plastic composites must be in accordance with the manufacturer's instructions.
7. Attach the decking to the rim joist in accordance with Figure 23.

Figure 22
TYPICAL DECKING

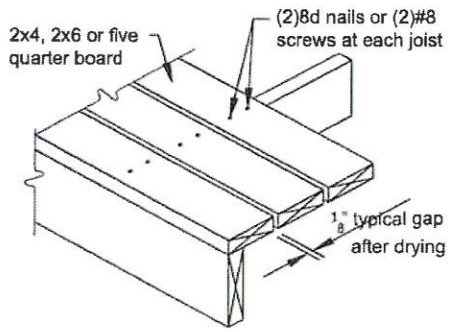

Figure 23
RIM JOIST CONNECTION

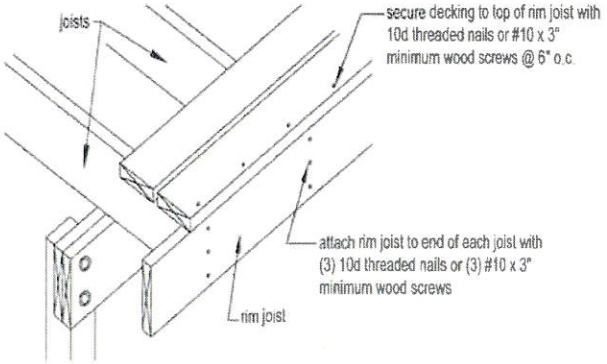

SECTION 13: GUARD AND POSTS

All open sides of a deck area that is more than 24 inches above grade – at any point within 36 inches beyond the edge of the deck – must have a guard that complies with Figure 24 and with all of the following:

1. Required horizontal guards shall not have openings from the walking surface to the required guard height which allow passage of a sphere 4 inches in diameter, when applying a force of 4 pounds.
2. Required guards at stairs shall not have openings which allow passage of a sphere 4 3/8 inches in diameter, when applying a force of 4 pounds, other than the triangular opening at the side of an open stair formed by the riser, tread, and bottom rail of a guard, which shall not allow passage of a 6 inch sphere, when applying a force of 4 pounds.
3. Wet lumber must be spaced such that when shrinkage due to drying occurs, a compliant opening is maintained.
4. Rope, cable, or a similar non–rigid material may be used instead of balusters if it is strung with maximum openings of 3 1/2 inches and with vertical supports no more than 4 feet apart.
5. The guard and posts must withstand a 200–pound load applied in any direction.
6. Guard–infill components, such as balusters and panel fillers, must withstand a horizontally applied, perpendicular load of 50 pounds on any one–foot–square area.
7. Wood–plastic composites of equivalent dimensions may be substituted for the guard cap and infill elements shown in Figure 24 if the manufacturer's instructions permit this use.

Figure 24
GUARDS

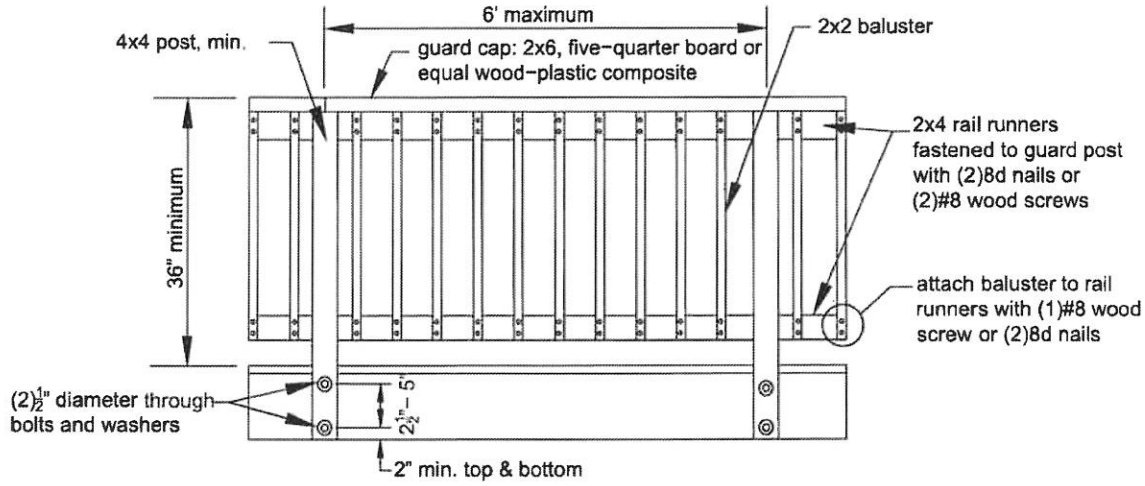

Spindle spacing < 4 3/8 "

Guard posts. Guard posts must be attached to the deck structure in accordance with all of the following:

Notching guard posts, as shown in Figure 25, is prohibited.

1. Notching guard posts, as shown in Figure 25, is prohibited.
2. Hold–down anchors must have a minimum capacity of 1,800 pounds.
3. Guard posts may be attached to either side of the end joist or rim joist.
4. Bolt holes for a post must be at least 2 inches from the wood edge, at least 2½ inches apart, and no more than 5 inches apart.
5. Hold–down anchors, as shown in Figures 26 and 27, must be used to attach the guard post to the end joist and rim joist, respectively.

Figure 25

POST NOTCHING PROHIBITED

Figure 26
GUARD POST TO END JOIST

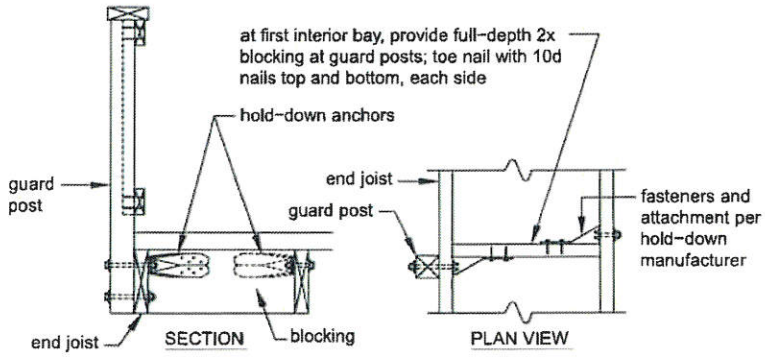

Figure 26
GUARD POST TO RIM JOIST

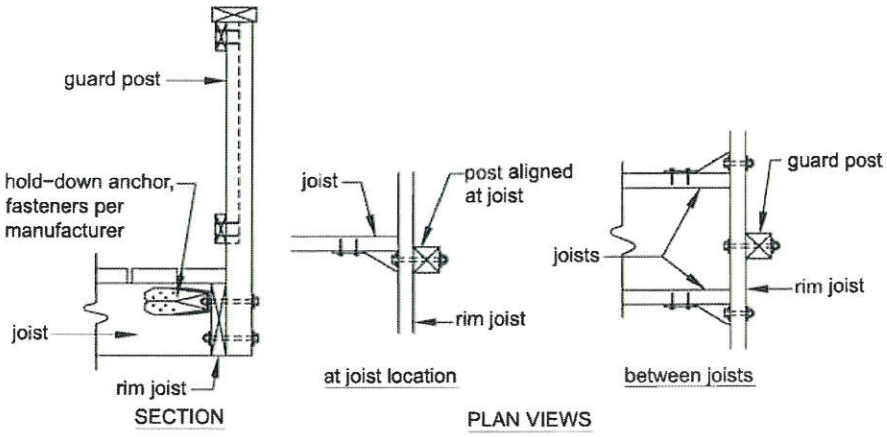

SECTION 14: STAIRS

Stair dimensions. Stair dimensions must comply with all of the following:

1. The minimum width of a stairway is 36 inches.
2. Handrails and associated trim may project a maximum of 4 1/2 inches into the required width at each side of the stairway. The minimum clear width at and below the handrail, including at treads and landings, cannot be less than 31 1/2 inches where a handrail is installed on one side, and 27 inches where handrails are provided on both sides.
3. Stair geometry and openings must be as shown in Figure 27.

Figure 27
TREADS AND RISERS

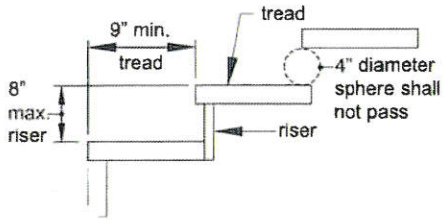

4. Within a stairway flight, the largest tread depth may not exceed the smallest tread depth by more than 3/8 inch, and the largest riser height may not exceed the smallest riser height by more than 3/8 inch.
5. If the total vertical height of a stairway exceeds 12 feet, an intermediate landing is required and must be constructed as a free–standing deck with flush beams and with posts.
6. Any landing width must equal or exceed the total width of the stairway it serves.

Stair stringers. Stringers must comply with all of the following:

1. Stringers must be sawn or solid 2"x12"s complying with the above tread and riser dimensions.
2. Cut stringers must be spaced no more than 18 inches on center.
3. Stringers must bear on a solid surface, a minimum of 3 1/2 inches thick and 8 inches in diameter, and attach to the deck or a landing in accordance with Figure 28. Prior to placement of solid surface, all loose or organic material shall be removed.
4. Stringer–span length is measured using the horizontally projected distance between the centerlines of bearing at each end.
5. The span length of a cut stringer must not exceed 6 feet–0 inches, and the throat size of cut stringers must not be less than 5 inches, as shown in Figure 29.

Solid–stringer exception: Stringers for a stairway that has a width of 36 inches may have a horizontally projected span of up to 13 feet 3 inches if the stairway is framed solely with 2 solid stringers.

Intermediate–supported stringers: If the total stringer length exceeds the above dimensions, a 4"x4" post may be provided to support the stringer and shorten its span length. The 4"x4" post must be notched and bolted to the stringer in accordance with Figure 2. The post must bear over the middle one–third of a footing that is constructed in accordance with Figure 29 and must be attached as shown in Figure 2. An intermediate landing as described above may also be provided to shorten the stringer span.

Figure 28
STRINGER BEARING

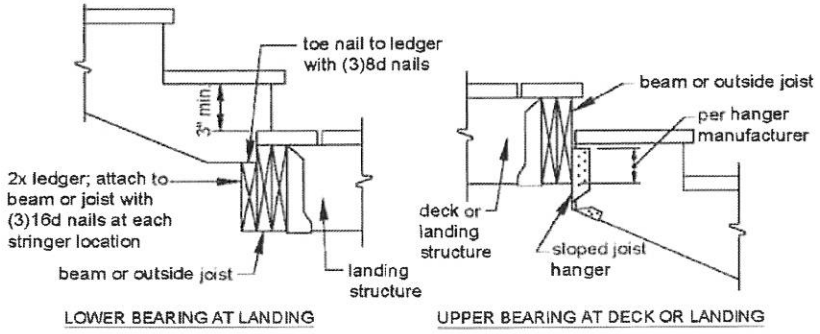

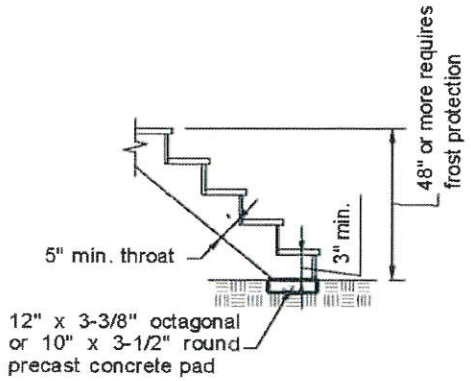

LOWER BEARING AT FOOTING

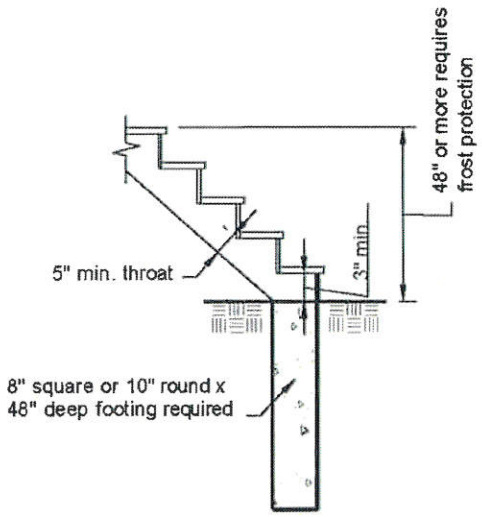

LOWER BEARING AT FOOTING – FROST PROTECTED

Figure 29
STRINGER BEARING

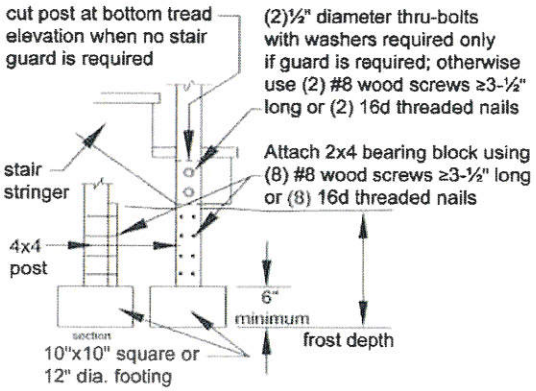

Figure 30
STRINGER SPAN LENGTH

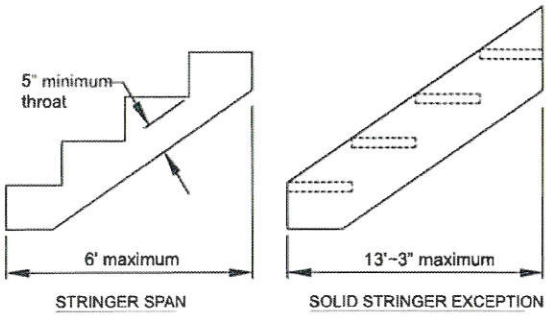

Tread and riser material. Treads and risers must comply with all of the following:

1. Tread material must be equivalent to the decking specified in section 12 and be attached in accordance with Figure 31, except wood–plastic composites must be attached in accordance with the manufacturer's instructions.
2. Stairs constructed using the solid–stringer exception noted above must have treads constructed of 2x wood material only and be attached in accordance with Figure 30.
3. Risers that are not open (as shown in Figure 27) must be framed with 1x lumber minimum or an manufacturer recommended wood–plastic composite.

All risers must match within 3/8" including the bottom

Figure 31
STAIRWAY TREADS

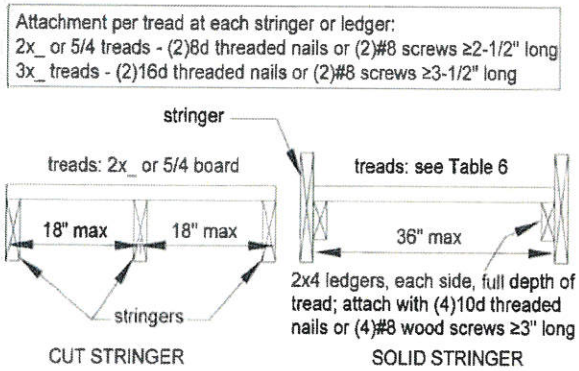

Table 7
MINIMUM TREAD SIZES[1]

Species	Cut Stringer	Solid Stringer
Douglas Fir/ Larch, Hem/ Fir, SPF[2]	2x4 or 5/4	2x8 or 3x4
Southern Pine	2x4 or 5/4	2x8
Redwood, Western Cedars, Ponderosa Pine[3], Red Pine[3]	2x4 or 5/4	2x10 or 3x4

[1] Assumes 300 lb concentrated load, L/288 deflection limit, No. 2 grade, and wet service conditions.
[2] Incising assumed for refractory species including Douglas fir–larch, hem–fir, and spruce–pine–fir.
[3] Design values based on northern species with no incising assumed.

Stair guards. Guards must be provided on all open sides of stairs consisting of more than 3 risers. Stair guards must comply with section 13 and Figure 32.

Spindle spacing < 4 3/8"

Figure 32
STAIR GUARDS

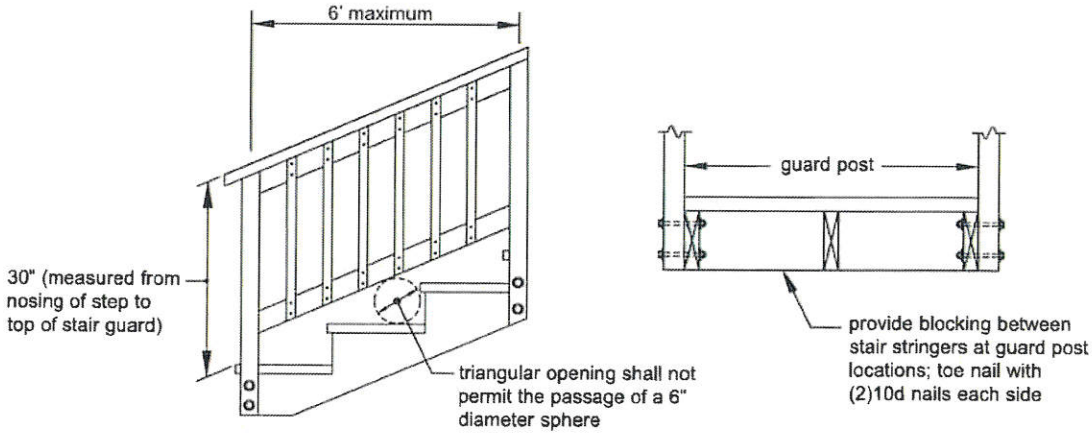

Stair handrails. A flight of stairs with more than 3 risers must have at least one handrail that complies with all of the following:

1. The handrail must be located at least 30 inches, but no more than 38 inches above the nosing of the treads – except that a volute, turnout, starting easing, or transition fitting may depart from these dimensions. Measurement must be taken from the nosing to the top of the rail.
2. The handrail must be attached to a stair guard or exterior wall acting as a barrier as shown in Figure 33.
3. The handrail and connecting hardware must be decay– and corrosion–resistant.
4. The handrail must have a smooth surface with no sharp corners and must be graspable, as shown in Figure 34. Recessed sections may be shaped from a 2"x6" or five–quarter board, as shown there.
5. Handrails must run continuously from a point directly over the lowest riser to a point directly over the highest riser.
6. Handrails may be interrupted by guard posts.

Figure 33
STAIR HANDRAILS

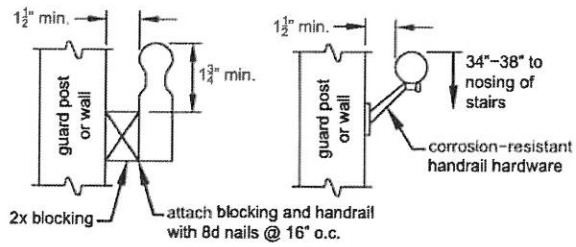

Figure 34
HANDRAIL GRASPABILITY

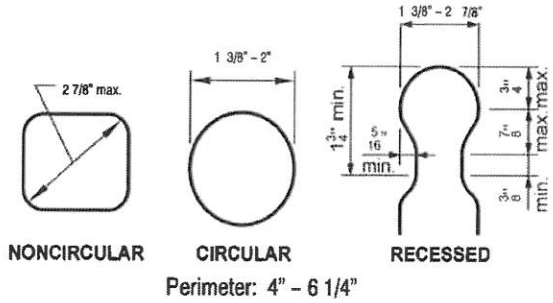

Spiral stairs. Stair dimensions above are for standard stairs secured in accordance with methods shown in this appendix. Spiral stairs are allowed at decks when designed in accordance with the provisions of Chapter SPS 321.04. Connection of spiral stairs to decks and the supporting load path shall be designed in accordance with accepted engineering practices and with applicable provisions of the Uniform Dwelling Code.

SECTION 15: FRAMING PLAN

A typical framing plan shows a bird's–eye or plan view of the joist and beam layout; the location of the ledger board, diagonal bracing or hold–down devices, posts, and footings; and the type, size, and spacing of the ledger board fasteners. You can use the sample typical deck framing plan shown on the next page in combination with the requirements in this document to complete your deck.

Figure 35
TYPICAL DECK FRAMING PLAN

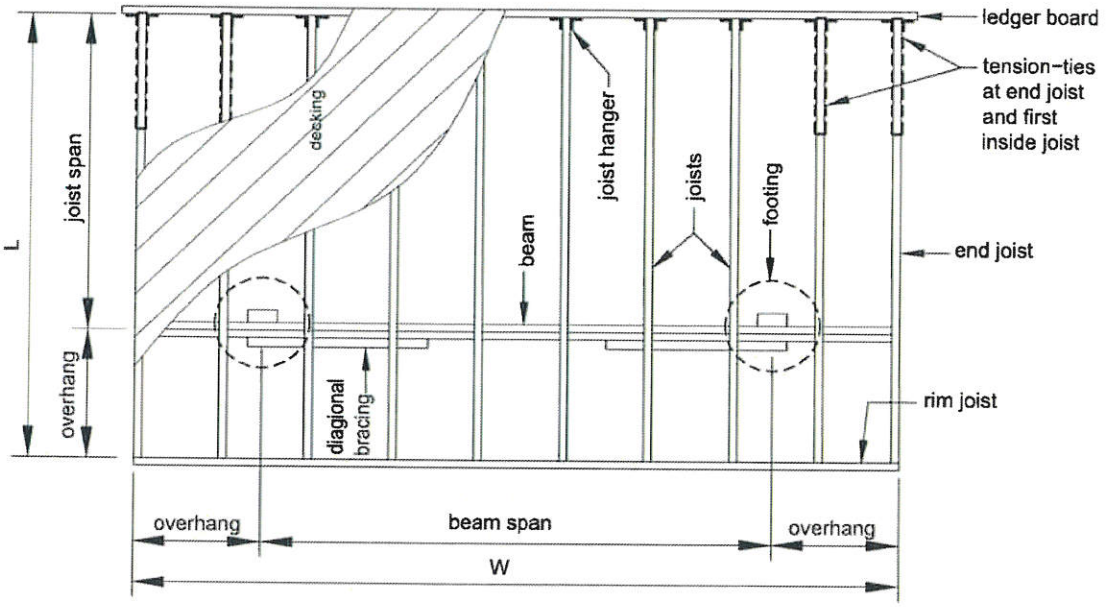

Decking: ☐ 2x4 ☐ 2x6 ☐ five–quarter board ☐ wood–plastic composite (per ASTM D 7032)
☐ Other decking, evaluation report number:____

Joists: size: ☐ 2x6 ☐ 2x8 ☐ 2x10 ☐ 2x12 spacing: ☐ 12 in. ☐ 16 in. ☐ 24 in.
joist span dimension: _____ft. – _____in.
overhang: ☐ Yes ☐ No overhang dimension: _____ft. – _____in.
rim joist: ☐ 2x6 ☐ 2x8 ☐ 2x10 ☐ 2x12

Beam(s): number of plies: ☐ 2 ☐ 3 size: ☐ 2x6 ☐ 2x8 ☐ 2x10 ☐ 2x12
overhang: ☐ Yes ☐ No overhang dimension: _____ft. – _____in.

Posts: size: ☐ 4x4 ☐ 4x6 ☐ 6x6 height: _____ft. – _____in.

Footings: size:_____in. ☐ square ☐ round thickness: _____in.

Ledger: ledger board size: ☐ 2x8 ☐ 2x10 ☐ 2x12 ☐ Not applicable (free–standing deck)
fastener: ☐ Through bolt ☐ Lag screw ☐ Wood screw
☐ Expansion anchor ☐ Adhesive anchor

Lateral support: ☐ Tension–tie ☐ Diagonal bracing, size: ☐ 2x
(not permitted for free–standing deck)

Deck size: L=_____ft. – _____in. W=_____ft. – _____in.

Fastener Types

Fastener Types and Sizes Specified for Simpson Strong-Tie® connectors

Many Simpson Strong-Tie connectors have been designed and tested for use with specific types and sizes of fasteners. The specified quantity, type and size of fastener must be installed in the correct holes on the connector to achieve published loads. Other factors such as fastener material and finish are also important. Incorrect fastener selection or installation can compromise connector performance and could lead to failure. Simpson Strong-Tie does not offer all of these fasteners, see retail information for Simpson Strong-Tie nails. For more information, see Fastening Systems, or access our Fastener Finder.

Also see fastening identification on Simpon Strong-Tie connectors and nail information.

Fasteners are drawn to scale. Nail diameter assumes no coating. Screw diameter refers to shank diameter. See technical bulletin T-NAILGUIDE for more information.

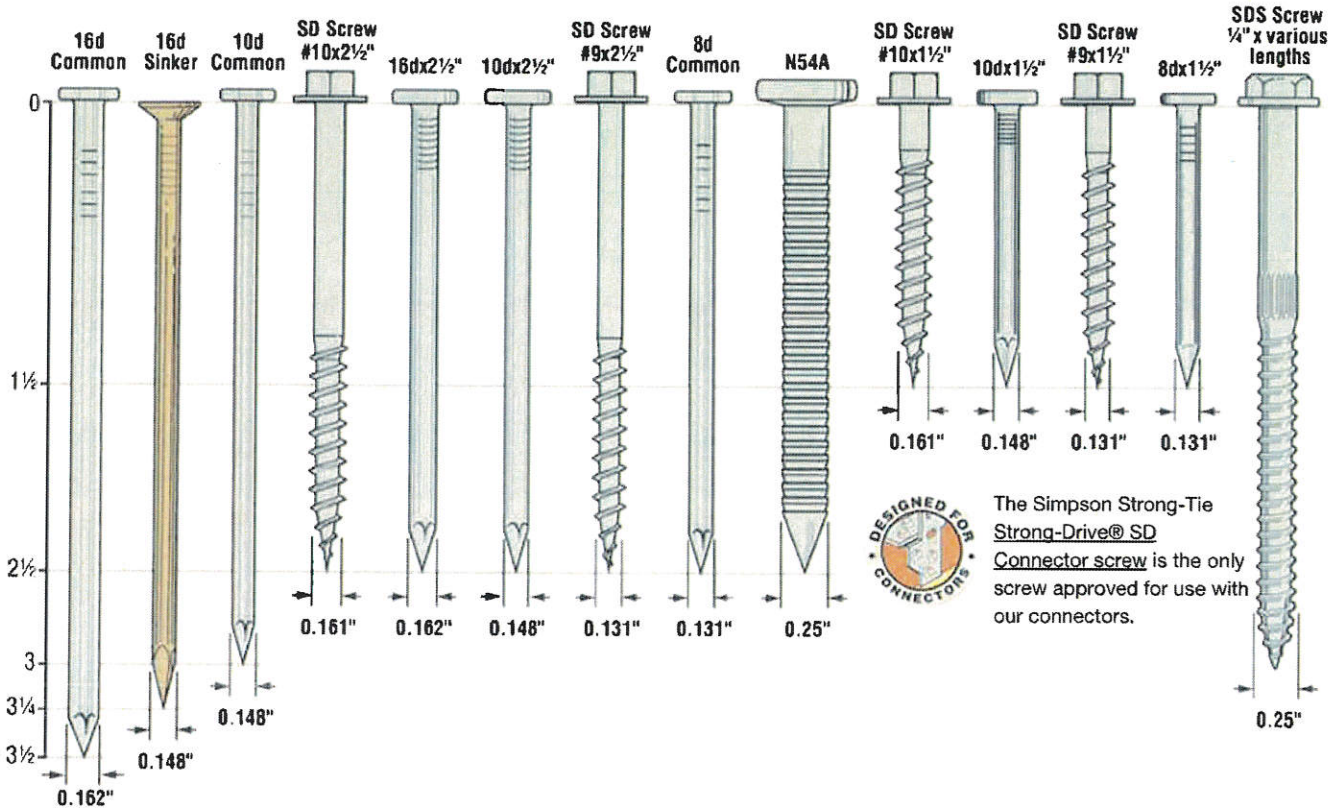

The Simpson Strong-Tie Strong-Drive® SD Connector screw is the only screw approved for use with our connectors.

Fastener Design Information:

In some cases it is desirable to install Simpson Strong-Tie face mount joist hangers and straight straps with nails that are a different type or size than what is called out in the load table. In these cases these reduction factors must be applied to the allowable loads listed for the connector.

Load Adjustment Factors for Optional Fasteners Used with Face Mount Hangers and Straight Straps

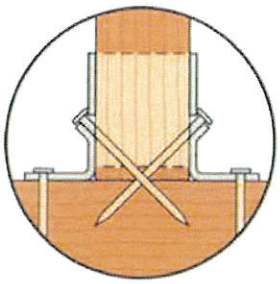

Double shear nailing should use full length common nails

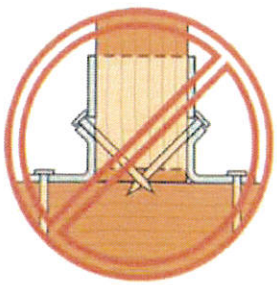

Shorter nails may not be used as double shear nails

Beam-to-Post Connections

At the point where a beam meets a post, it must be properly connected to the post in order to resist gravity, lateral and uplift loads. This pertains to solid sawn beams or those comprised of multiple members, whether they rest on top or are fastened to the side of the post.

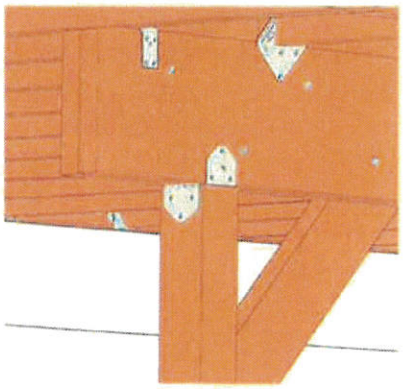

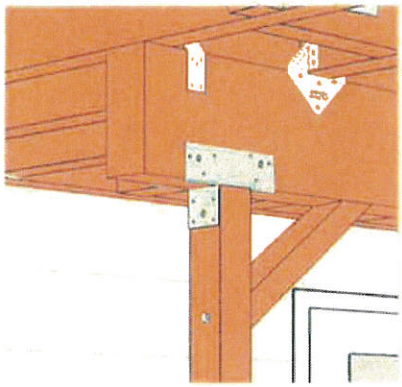

Code Requirements

✔ Where posts and beam or girder construction is used to support floor framing, positive connections shall be provided to ensure against uplift and lateral displacement.

IRC 2006, Section R502.9
IBC 2006, Section 2304.9.7

Simpson Strong-Tie® Solutions

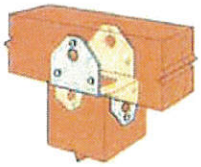

BC Post Cap: For single-member solid sawn beams. ZMAX® coating or stainless steel recommended.

BCS Post Cap: Connects double 2x's to a 4x post or triple 2x's to a 6x post. ZMAX® coating or stainless steel recommended.

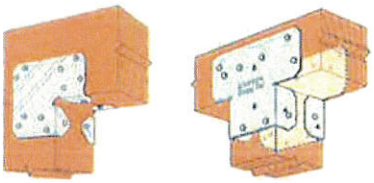

LCE/AC Retrofit Post Caps: Two-piece cap may be installed before or after lumber is in place when the sides of the post and beam are flush. ZMAX® coating or stainless steel recommended.

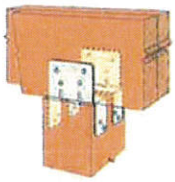

LPC Post Cap: Two-piece cap adjusts for beams smaller than post width. Features a ZMAX® galvanized coating.

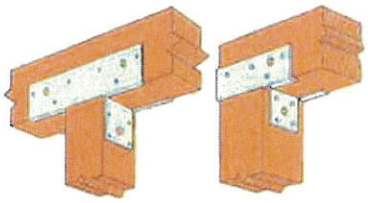

PC/EPC Post Caps: Connects beams at the top of the post. ZMAX® galvanized coating recommended.

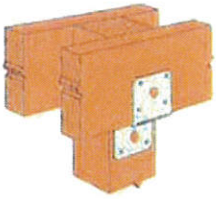

DJT14: Connects beams at the side of the post. ZMAX® coating or stainless steel recommended.

Selection of products based upon performance and/or suitability for a specific application should be made by a qualified professional. Simpson Strong-Tie recommends that deck designs be approved by the local building department before construction begins.

These products are available with a ZMAX® or hot-dip galvanized coating. Stainless-steel connectors are also available for higher exposure environments or applications using certain preservative-treated woods. See page 6 for more details.

F-DECKCODE09 ©2009 SIMPSON STRONG-TIE COMPANY INC.